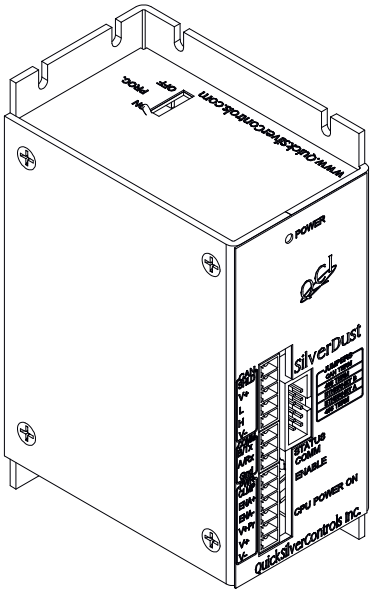
POWER
silverDust
STATUS
COMM
ENABLE
CPU POWER ON
QuicksilverControls Inc.
ON
PROC.
OFF
www.QuicksilverControls.com

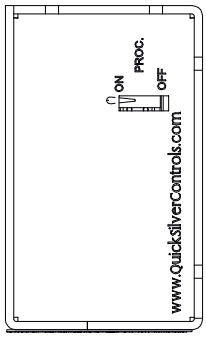
ON
PROC.
OFF
www.QuicksilverControls.com

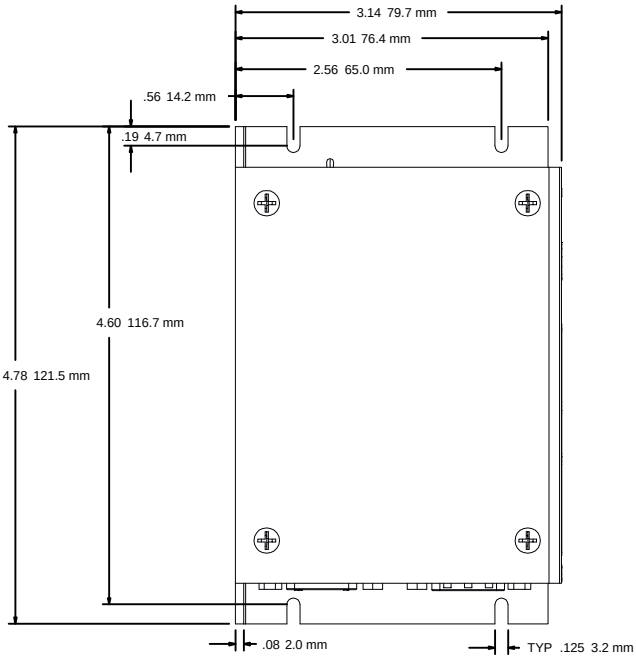
3.14 79.7 mm
3.01 76.4 mm
2.56 65.0 mm
.56 14.2 mm
.19 4.7 mm
4.60 116.7 mm
4.78 121.5 mm
.08 2.0 mm
TYP .125 3.2 mm

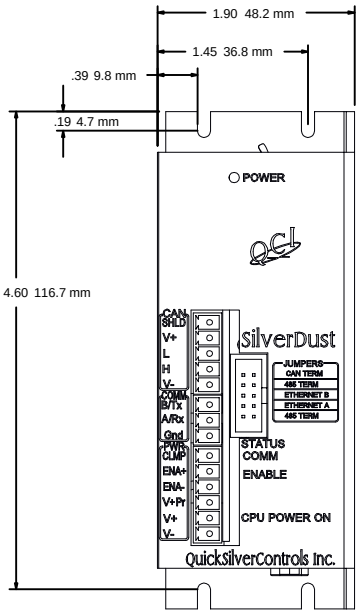
1.90 48.2 mm
1.45 36.8 mm
.39 9.8 mm
.19 4.7 mm
4.60 116.7 mm
POWER
CAN
SHLD
V+
L
H
V-
COMM
B/Tx
A/Rx
Gnd
PWR
CLMP
ENA+
ENA-
V+Pr
V+
V-
silverDust
JUMPERS
CAN TERM
485 TERM
ETHERNET B
ETHERNET A
485 TERM
STATUS
COMM
ENABLE
CPU POWER ON
QuicksilverControls Inc.

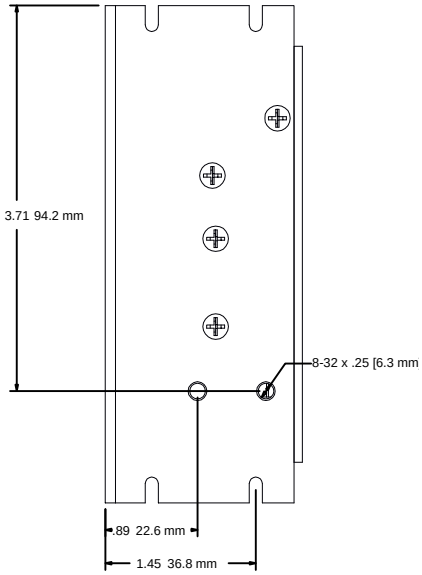
3.71 94.2 mm
8-32 x .25 [6.3 mm
.89 22.6 mm
1.45 36.8 mm

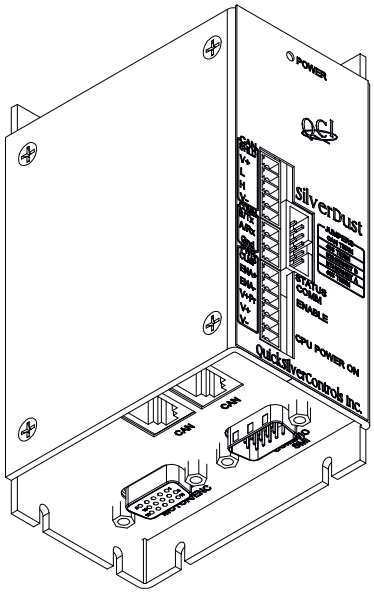
POWER
silverDust
STATUS
COMM
ENABLE
CPU POWER ON
QuicksilverControls Inc.
CAN
CAN
COMM/IO
SMI
MOTOR/ENC

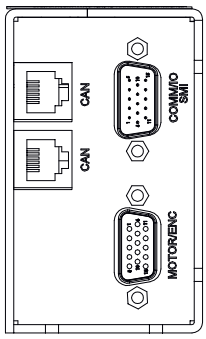
CAN
CAN
COMM/IO
SMI
MOTOR/ENC