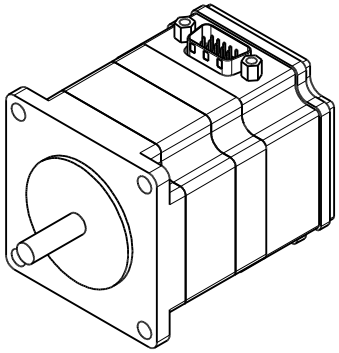

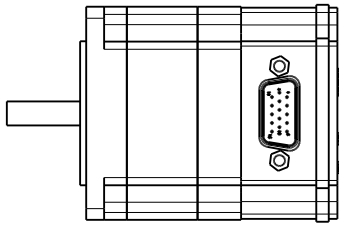

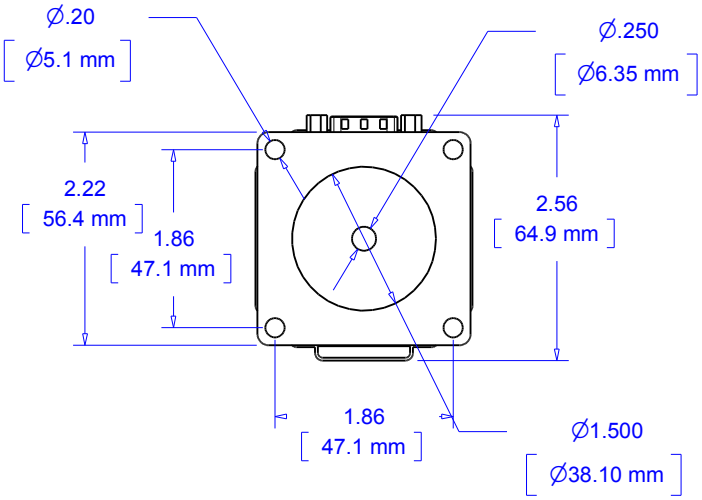
Ø.20
[Ø5.1 mm]
Ø.250
[Ø6.35 mm]
2.22
[56.4 mm]
1.86
[47.1 mm]
2.56
[64.9 mm]
1.86
[47.1 mm]
Ø1.500
[Ø38.10 mm]

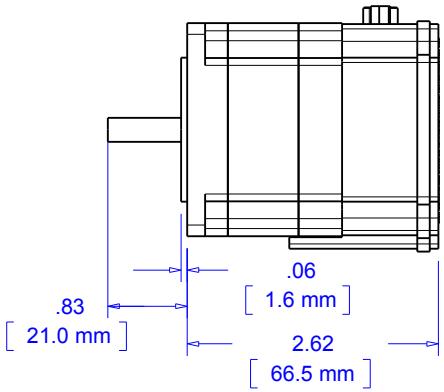
.83
[21.0 mm]
.06
[1.6 mm]
2.62
[66.5 mm]

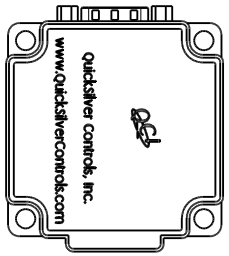
Quicksilver Controls, Inc.
www.QuicksilverControls.com