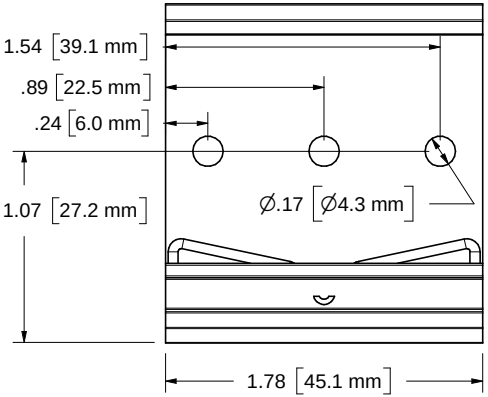
1.54 [39.1 mm]
.89 [22.5 mm]
.24 [6.0 mm]
1.07 [27.2 mm]
Ø.17 [Ø4.3 mm]
1.78 [45.1 mm]

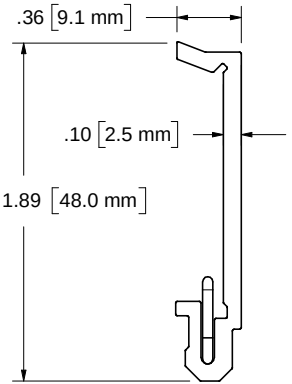
.36 [9.1 mm]
.10 [2.5 mm]
1.89 [48.0 mm]