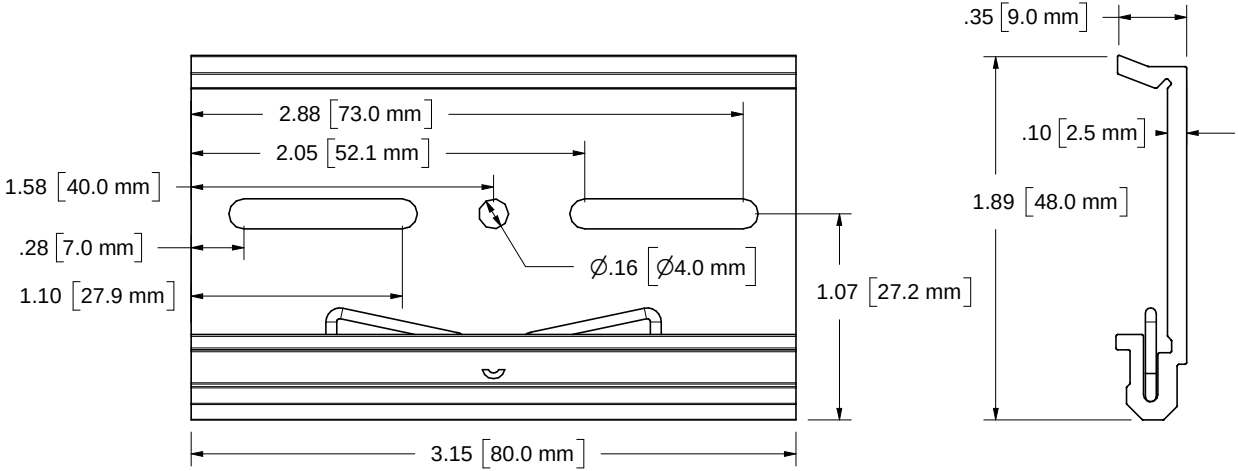
2.88 [73.0 mm]
2.05 [52.1 mm]
1.58 [40.0 mm]
.28 [7.0 mm]
1.10 [27.9 mm]
Ø.16 [Ø4.0 mm]
1.07 [27.2 mm]
3.15 [80.0 mm]
.35 [9.0 mm]
.10 [2.5 mm]
1.89 [48.0 mm]