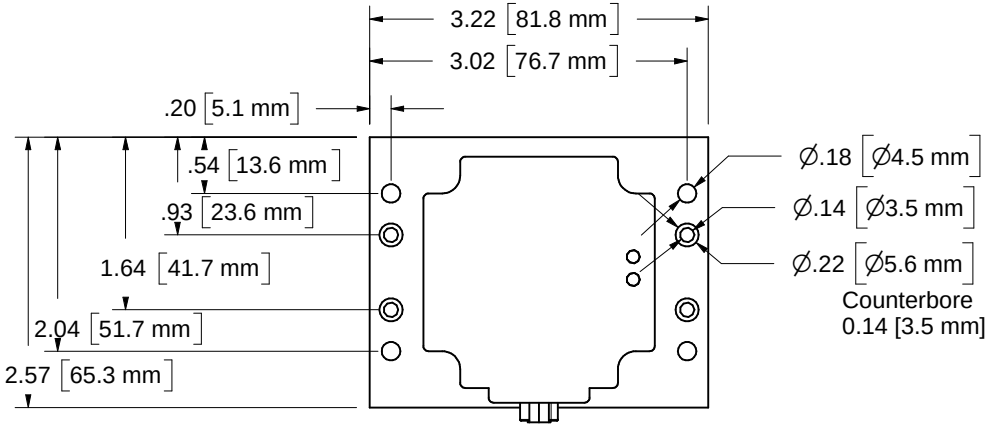
3.22 [81.8 mm]
3.02 [76.7 mm]
.20 [5.1 mm]
.54 [13.6 mm]
.93 [23.6 mm]
1.64 [41.7 mm]
2.04 [51.7 mm]
2.57 [65.3 mm]
Ø.18 [Ø4.5 mm]
Ø.14 [Ø3.5 mm]
Ø.22 [Ø5.6 mm]
Counterbore
0.14 [3.5 mm]

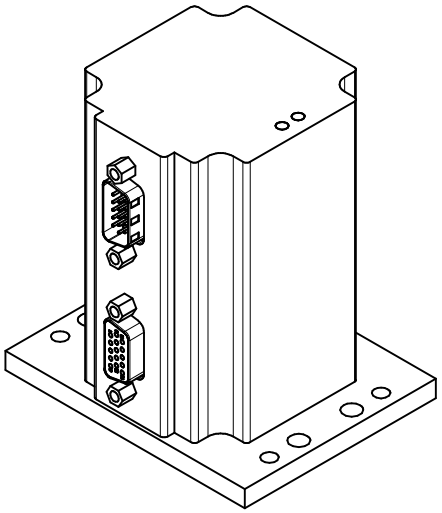

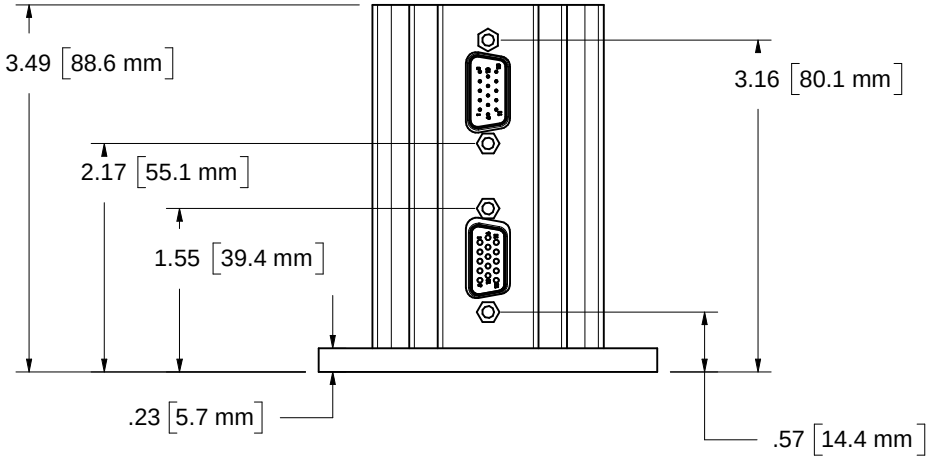
3.49 [88.6 mm]
2.17 [55.1 mm]
1.55 [39.4 mm]
.23 [5.7 mm]
3.16 [80.1 mm]
.57 [14.4 mm]

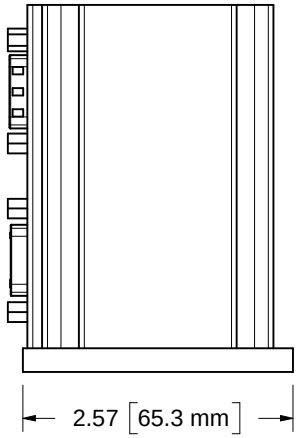
2.57 [65.3 mm]