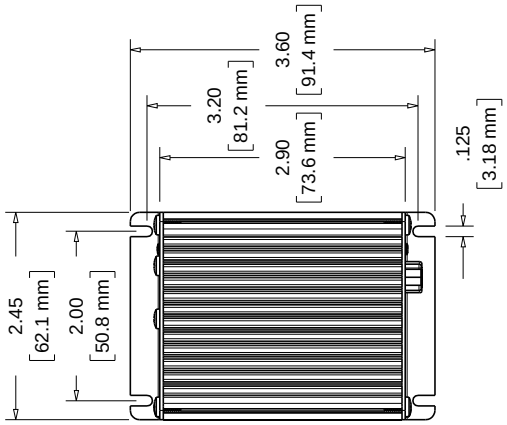
2.45
[62.1 mm]
2.00
[50.8 mm]
3.20
[81.2 mm]
2.90
[73.6 mm]
3.60
[91.4 mm]
.125
[3.18 mm]

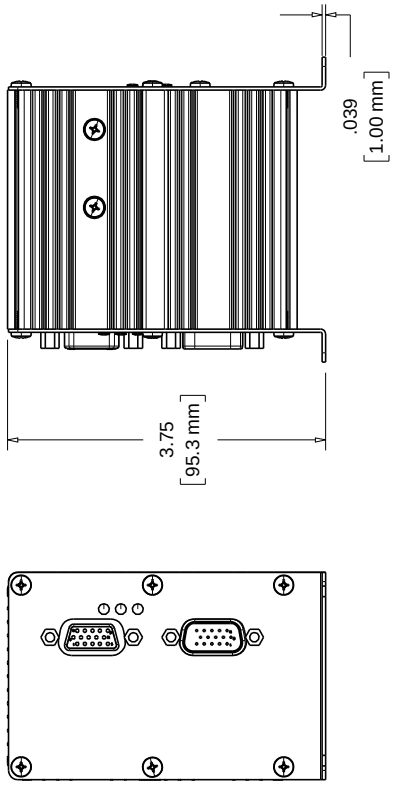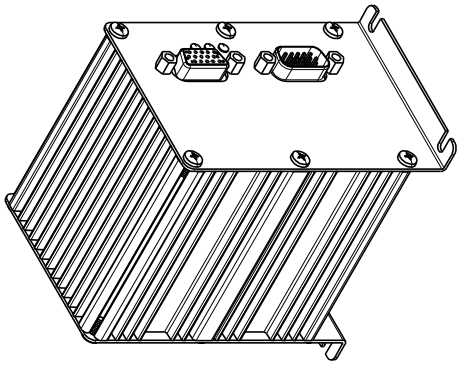
3.75
[95.3 mm]
.039
[1.00 mm]