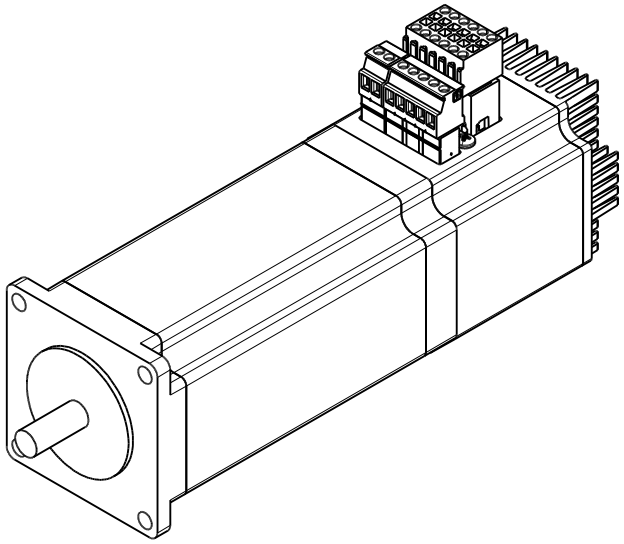

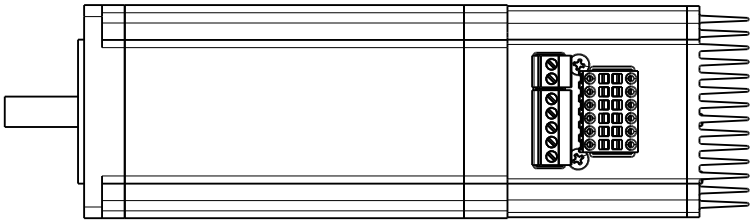

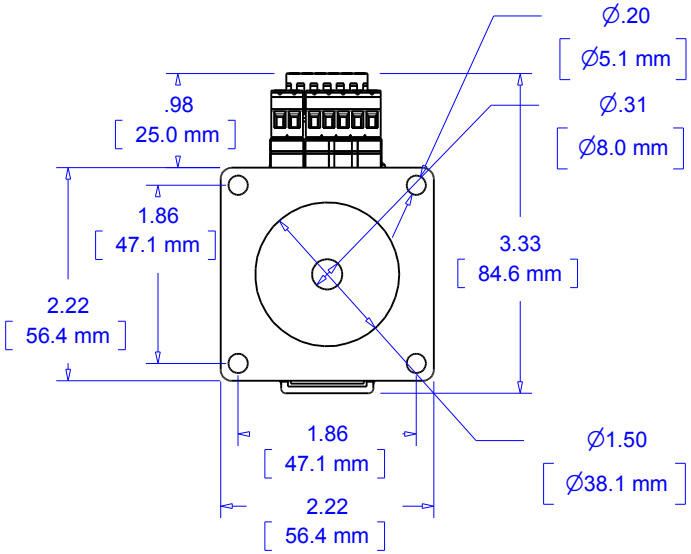
Ø.20
[Ø5.1 mm]
Ø.31
[Ø8.0 mm]
.98
[25.0 mm]
1.86
[47.1 mm]
3.33
[84.6 mm]
2.22
[56.4 mm]
1.86
[47.1 mm]
2.22
[56.4 mm]
Ø1.50
[Ø38.1 mm]

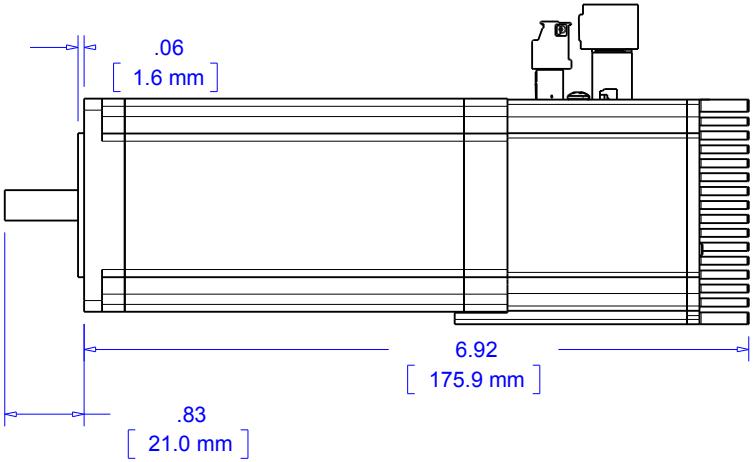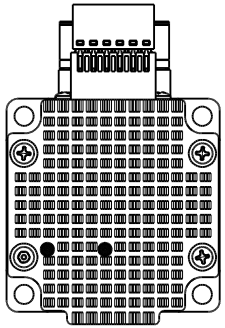
.06
[1.6 mm]
6.92
[175.9 mm]
.83
[21.0 mm]